Clamp Circuit

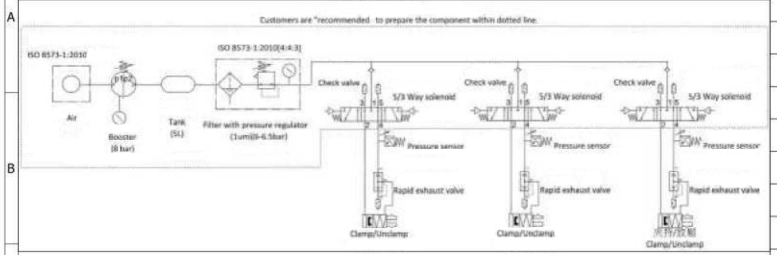

Note:

1.

The clamp air must comply with following quality classes as per ISO 8573-1:2010[4:4:3]

2.

The encoder air must comply with following quality classes as per ISO 8573-1:2010[1:4:1]

3.

The accuracy is compensated

4.

The non-contact tool measuring instrument is supplied by client.

5.

The drain port needs to be connected to the hydraulic unit(Only if using hydraulic fixture).

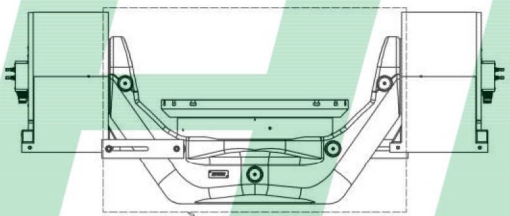

The labeled area is IP66, any special requirement please contact HIWIN.

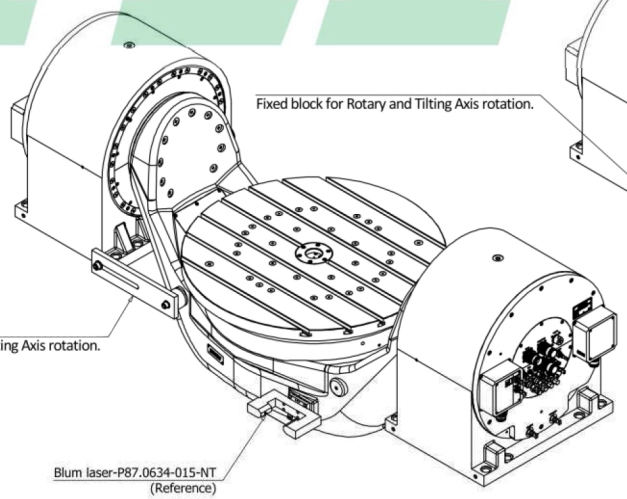

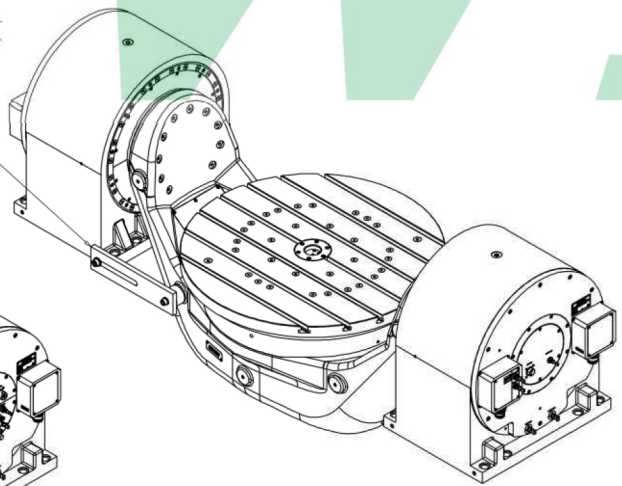

RT Specifications-B

Item	Spec.	Spec.
Table Diameter(mm)	800	-
Center Height(mm)	325	-
Table Height(mm)	225	-
T-slot Width(mm)	14H8	-
Axis Type	Rotary	Tilting(±120°)
Bearing I.D.(mm)	395	260
Torque Motor Type	TMRWDFC-PD-U10	TMRWDFC-PD-U10
Max. Speed with water cooling(rpm)	70	60
Continuous Torque with water cooling(Nm)	2200	2200*2
Continuous power with water cooling(kW)	16.1	13.8*2
Peak Torque with water cooling(Nm)	3900	3900*2
Continuous Current with water cooling(A)	40.2	40.2*2
Peak Current with water cooling(A)	108.5	108.5*2
Encoder interface	RCN2380	RCN2380
Accuracy(arc-sec)	±5 (note3)	±5 (note3)
Repeatability(arc-sec)	4	4
Clamping Type	Pneumatic	Pneumatic
Clamping Torque(Nm)	4200	4200*2
Net Weight(kg)	~2700	-
Load Weight(kg)	1200	-
Controller supported	SIEMENS	-

Interface Specifications

No.	Item	Spec.	Note
A1-E1	Power connector	MS3100A-22-22P	-
A1-E2	Temperature sensor connector	MS3100A-20-29P	-
A1-E3	Clamp Signal connector	MS3100A-20-29P	-
A1-E4	Encoder Signal connector	M23	-
A1-H1	Water Cooling(In)	ø12	q≧ 28.6 l/min;△θ≦ 5K;△p≦ 1 bar
A1-H2	Water Cooling(Out)	ø12	q≧ 28.6 l/min;△θ≦ 5K;△p≦ 1 bar
A1-H3	Clamp Air	ø8	p=6.3±0.2 bar
A1-H4	UnClamp Air	ø8	p=6.3±0.2 bar
A2-E1	Power connector	MS3100A-22-22P	-
A2-E2	Temperature sensor connector	MS3100A-20-29P	-
A2-E3	Clamp Signal connector	MS3100A-20-29P	-
A2-H1	Water Cooling(In)	ø12	q≧ 28.6 l/min;△θ≦ 5K;△p≦ 1 bar
A2-H2	Water Cooling(Out)	ø12	q≧ 28.6 l/min;△θ≦ 5K;△p≦ 1 bar
A2-H3	Clamp Air	ø8	p=6.3±0.2 bar
A2-H4	UnClamp Air	ø8	p=6.3±0.2 bar
C-E1	Power connector	MS3100A-22-22P	-
C-E2	Temperature sensor connector	MS3100A-20-29P	-
C-E3	Clamp Signal connector	MS3100A-20-29P	-
C-E4	Encoder Signal connector	M23	-
C-H1	Water Cooling(In)	ø12	q≧ 28.6 l/min;△θ≦ 5K;△p≦ 1 bar
C-H2	Water Cooling(Out)	ø12	q≧ 28.6 l/min;△θ≦ 5K;△p≦ 1 bar
C-H3	Clamp Air	ø8	p=6.3±0.2 bar
C-H4	UnClamp Air	ø8	p=6.3±0.2 bar
C-H5	Internal Pressure Air	ø6	P=0.5 bar
C-H6	Drain Port	ø8	note 5
C-HI1	Hydraulic(In)	H1/4"	P=70 bar
C-HI2	Hydraulic(In)	H1/4"	P=70 bar
C-HI3	Hydraulic(In)	H1/4"	P=70 bar
C-HI4	Hydraulic(In)	H1/4"	P=70 bar
C-HO1	Hydraulic(Out)	ø7.65xø1.78	o-ring
C-HO2	Hydraulic(Out)	ø7.65xø1.78	o-ring
C-HO3	Hydraulic(Out)	ø7.65xø1.78	o-ring
C-HO4	Hydraulic(Out)	ø7.65xø1.78	o-ring
S31/1	Tool Cleaner	ø8	-
S31/2	Shutter Piston	ø4	-
S31/3	Barrier Air	ø6	-
S31/4	Plug Connection	MS3100A-20-29P	-

*	*	*	*	*
Modification	Section	Description	Date	Confirm
		Modify record		

	1	Rotary Table	MAN1
	*	AS01515A	
	AS01515A	RAB-800	2022/4/20

HIWIN TECHNOLOGIES

A

1 3

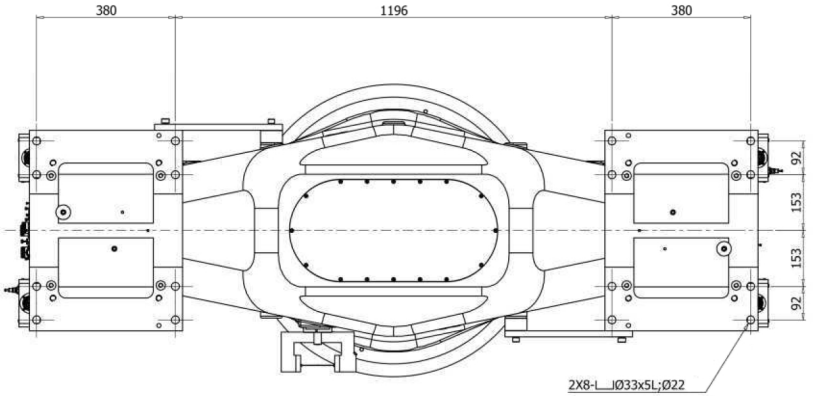

F VIEW

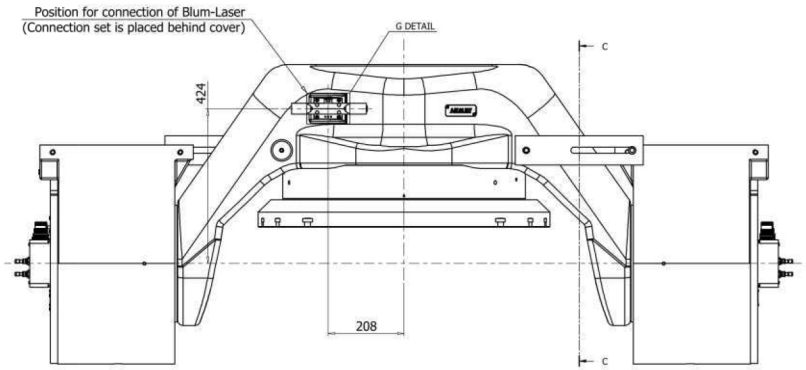

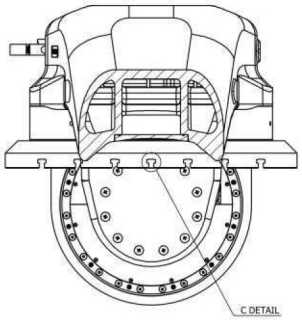

C-C SECTION

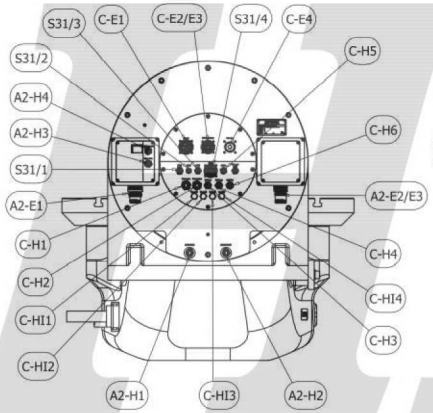

D VIEW

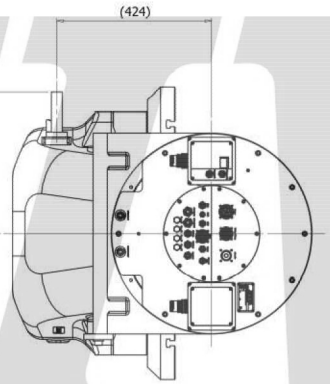

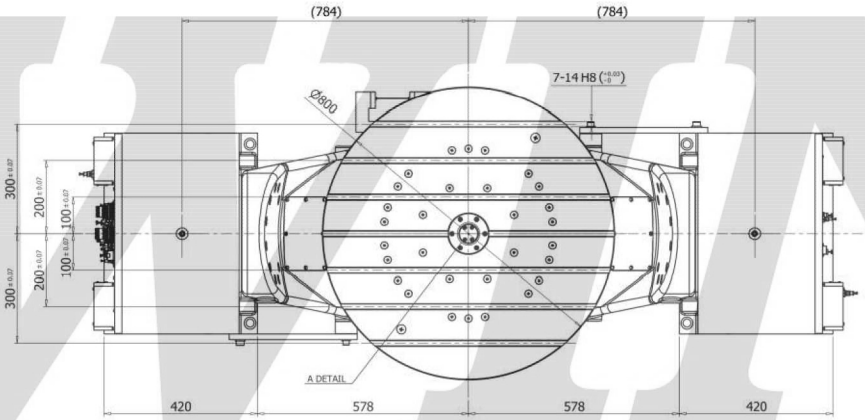

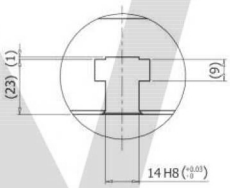

C DETAIL

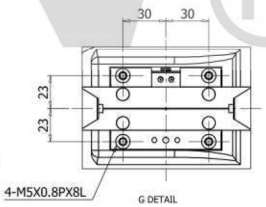

G DETAIL

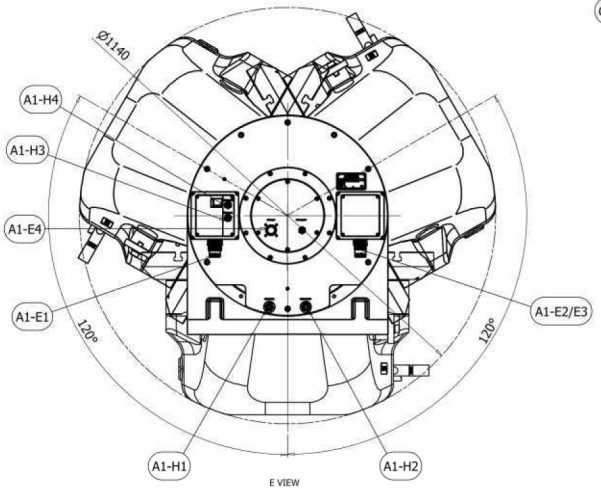

E VIEW

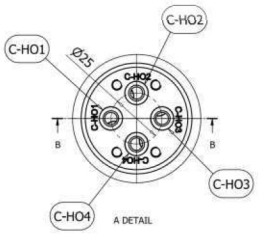

A DETAIL

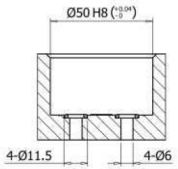

B-B SECTION

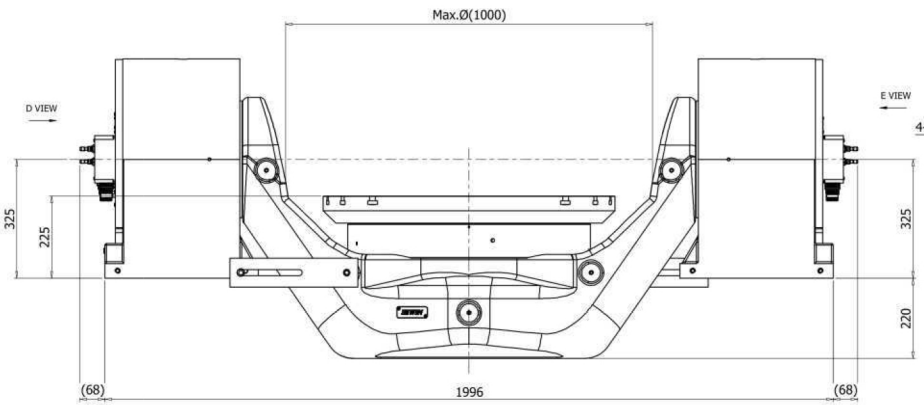

F VIEW

	I	Rotary Table	MAN1
		AS01515A	
	AS01515A	RAB-800	2022/4/20

mm							
UP TO	6	120	400	800	1200	2400	OVER 2400
±0.05	±0.1	±0.2	±0.3	±0.4	±0.5	±0.8	

HIWIN TECHNOLOGIES

A

2 / 3

A1-E1 for Tilting Axis TM Power Connector

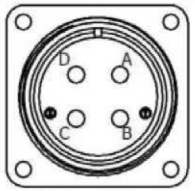

MS3100A-22-22P
46A, 4P(8mm²), Male

PIN	Wire Markers	Color / Description
A	U	Black / U/L1
B	V	Black / V/L2
C	W	Black / W/L3
D	PE	Y/G / GND

A2-E1 for Tilting Axis TM Power Connector

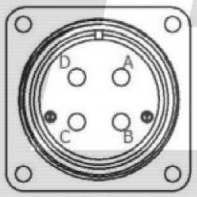

MS3100A-22-22P
46A, 4P(8mm²), Male

PIN	Wire Markers	Color / Description
A	U	Black / U/L1
B	V	Black / V/L2
C	W	Black / W/L3
D	PE	Y/G / GND

C-E1 for Rotary Axis TM Power Connector

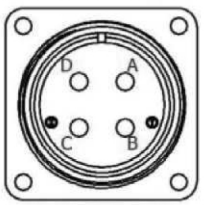

MS3100A-22-22P
46A, 4P(8mm²), Male

PIN	Wire Markers	Color / Description
A	U	Black / U/L1
B	V	Black / V/L2
C	W	Black / W/L3
D	PE	Y/G / GND

A1-E2/E3 for Tilting Axis TM Temperature and Pressure Sensor Connector

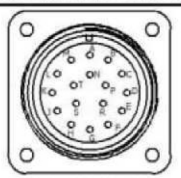

MS3100A-20-29P
13A,17P(1.3mm²),Male

PIN	Wire Markers	Color/Description
A	PTC+	Blue
B	PTC-	Yellow
C	TEMP-	Brown
D	TEMP+(U)	White
E	TEMP+(V)	Gray
F	TEMP+(W)	Pink
G	DC 24V	Brown
H	DC 0V	Blue
J	A1_CI	White
K	A1_UI	Black
R	Shield	Shield

A2-E2/E3 for Tilting Axis TM Temperature and Pressure Sensor Connector

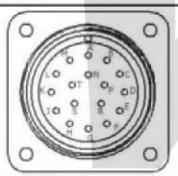

MS3100A-20-29P
13A,17P(1.3mm²),Male

PIN	Wire Markers	Color/Description
A	PTC+	Blue
B	PTC-	Yellow
C	TEMP-	Brown
D	TEMP+(U)	White
E	TEMP+(V)	Gray
F	TEMP+(W)	Pink
G	DC 24V	Brown
H	DC 0V	Blue
J	A2_CI	White
K	A2_UI	Black
R	Shield	Shield

A1-E4 for Tilting Axis TM Encoder Connector

M23 coupling (male)
17-pin

PIN	Wire Markers	Color/Description
1	Sensor(Up)	Blue
4	Sensor(0V)	White
7	Up	Brown/Green
8	CLOCK	Violet
9	CLOCK*	Yellow
10	0V	White/Green
11	Shield	Internal shield
12	B+	Blue/Black
13	B-	Red/Black
14	DATA	Gray
15	A+	Green/Black
16	A-	Yellow/Black
17	DATA*	Pink

C-E2/E3 for Rotary Axis TM Temperature and Pressure Sensor Connector

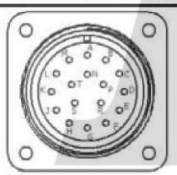

MS3100A-20-29P
13A,17P(1.3mm²),Male

PIN	Wire Markers	Color/Description
A	PTC+	Blue
B	PTC-	Yellow
C	TEMP-	Brown
D	TEMP+(U)	White
E	TEMP+(V)	Gray
F	TEMP+(W)	Pink
G	DC 24V	Brown
H	DC 0V	Blue
J	C_CI	White
K	C_UI	Black
R	Shield	Shield

C-E4 for Rotary Axis TM Encoder Connector

M23 coupling (male)
17-pin

PIN	Wire Markers	Color/Description
1	Sensor(Up)	Blue
4	Sensor(0V)	White
7	Up	Brown/Green
8	CLOCK	Violet
9	CLOCK*	Yellow
10	0V	White/Green
11	Shield	Internal shield
12	B+	Blue/Black
13	B-	Red/Black
14	DATA	Gray
15	A+	Green/Black
16	A-	Yellow/Black
17	DATA*	Pink

S31/4 for Rotary Axis Plug Connector

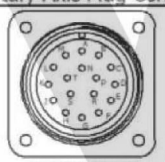

MS3100A-20-29P
13A,17P(1.3mm²),Male

PIN	Wire Markers	Color/Description
A	1	White
B	2	Brown
C	3	Green
D	4	Yellow
E	5	Gray
F	6	Pink
G	7	Blue
H	8	Red
J	9	Black
K	10	Violet
L	11	Gray/Pink
M	12	Red/Blue
N	Shield	Y/G

		Rotary Table	MAN1
		AS01515A	
	AS01515A	RAB-800	2022/4/20

UP TO 6: ±0.05; 6-120: ±0.1; 120-400: ±0.2; 400-800: ±0.3; 800-1200: ±0.4; 1200-2000: ±0.5; OVER 2000: ±0.8

HIWIN TECHNOLOGIES

A

3 /3